Codes
Department

Building and Zoning
North Park Street
Lebanon, NH 03766
Telephone: 603-448-1524
Facsimile: 603-448-0684

SINGLE & TWO-FAMILY DWELLINGS SOLAR/ELECTRICAL PERMIT APPLICATION AND INSTALLATION REQUIREMENTS

Note: Paragraphs 1 & 2 apply only to dwelling units designed, constructed or configured in a manner suitable for individual ownership. Lebanon electrical codes ae under the 2014 NEC.

1. Feeder, branch circuit and communications wiring shall serve the dwelling unit(s) in which it is installed.

2. Conductors supplying multiple units may be routed under slab, below exterior grade, on the exterior of the structure or within common areas of the structure where not prohibited by codes or regulations.

3. Conductors penetrating fire walls of adjoined buildings as defined in NEC 100 shall be installed in compliance with Article 225.

4. Disconnecting means are required either inside or outside nearest the point of feeder entrance to each unit per NEC 225.31 & 225.32. This also applies where the point of entrance is remote from the feeder disconnect or where the service is not attached to the building served, (i.e. pedestal mounted). Where multiple feeder disconnecting means are capable of being locked with a single lock, a readily accessible feeder disconnect shall be installed at or within each unit.

5. Bonding and grounding of services shall be in accordance with Article 250. Where dwelling units are separated by firewall, NEC 250.104(A)(3) shall also apply.
   Where a common service is installed, each metallic domestic water service pipe shall be bonded to the grounding electrode conductor. The grounding electrode conductors(s) shall be connected to the grounded service conductor(s) at the meter bank or main disconnect enclosure, 250.24, 250.50, 250.64.(D).

6. Load calculations in accordance with NEC 220 and a one-line feeder riser diagram shall be provided with each permit application. The diagram shall include the following details:
   a. service lateral or service entrance conductor size
   b. amp rating of meter pack bus
   c. a mp rating of service main breaker (if installed)
   d. amp rating of branch feeder breakers
   e. conductor size and type of branch feeders
   f. grounding electrode conductor size and connections
   g. proposed feeder routing

City of Lebanon,
New Hampshire

Building/Zoning Permit
Application Form

Property Owner (Owner of Record):_____ Tel.#:_____
failing Address of Owner:_____ Fax #:_____
Email:_____
CONTACT PERSON FOR PROJECT:_____ Tel.#:_____
Mailing Address:_____ Fax #:_____
Email: _____

1. Project Location:

City Tax Mop:	Lot:	Plot:	Zoning District:
Location (Physical Address of Project):			

Z. Project description:

describe the nature of work proposed, in detail
_____
_____
_____
Cost of Project Construction: $

3. Type of Occupancy: (check where appropriate)

Existing	__Vacant Lot	__One Family	__ Two Family	__ Multi Family	__ Commercial	__ Industrial
Proposed		__One Family	__ Two Family	__ Multi Family	__Commercial	__Industrial

For Commercial or Industrial:

Specific Type of Use (for example: retail, office, industrial, etc.):
Name of Commercial/Industrial Tenant (if known):

THE UNDERSIGNED OWNER HEREBY REQUESTS A BUILDING/ZONING PERMIT FOR THE ABOVE USE, TO BE ISSUED ON THE BASES OF THE REPRESENTATIONS CONTAINED HEREIN, INCLUDING ALL NECESSARY SUPPORT STAYEMENTS. PERMIT IS VOID IN THE EVENT OF MISREPRESENTATEON AND/OR NOT BEING IN COMPLIANCE WITH THE BUILDING CODE. ZONING ORDINANCE, SITE PLAN REVIEW/SUBDIVISION REGULATIONS (IF APPLICABLE) AND OTHER APPLICABLE STATE AND CITY LAWS AND REGULATIONS. CONSTRUCTION IS NOT AUTHORIZED UNTIL PERMIT IS ISSUED.

Property Owner Signature:_____ Date:_____

IF, AS OWNER, YOU WISH TO DESIGNATE AN AGENT TO ACT ON YOUR BEHALF, PLEASE READ THE FOLLOWING STATEMENT AND SIGN BELOW. I hereby designate the individual listed as contact person for project as my agent for the purpose of procuring the necessary local permits for the proposed work as described herein. Representations made by my agent may be accepted as though made by me personally, and I understand that I am bound by any official decision mode on the basis of such representation.

Property Owner Signature: _____ DATE:_____

FOR OFFICE USE ONLY

APPROVED - ZONING ADMINISTRATOR: _____ DATE:_____
*APPROVED - BUILDING OFFICIAL:*_____ DATE:_____

Received	File#	Permit#	Issued
Const. *Cost*	Permit Fee $	Vouchers	Dote paid

(Copy provided to Assessing Dept. on_____)

NOTICE TO ELECTRICIANS

IMPORTANT INSTALLATION REQUIREMENTS (Residential)

Lebanon Codes & Building Department, June 2009
Lebanon Electrical Codes are under 2014 NEC

1. SERVICE DISCONNECT LOCATION—Interior locations of the service disconnecting means shall be nearest the point of entry of the service entrance conductors. Generally, this is considered to be within 30 inches. The service cable must be exposed for the entire run. Contact the city electrical inspector if compliance is not feasible. (There is no 10 foot allowance rule in the NEC.) [Section 230.70(A)(1)]
2. USE CABLE—Type USE, USE-2, XLPE conductors are not permitted to be installed Within or on the exterior of buildings except where the conduit rises up from grade to terminate in an exterior enclosure. Conductors for interior use must have one or more of the insulation types listed in Table 310.13(A). [Sections 33B.12(B), 310.13]
3. SERVICE HEAD LOCATION-Service heads shall be installed above the point of attachment of the Service drop Conductors wherever possible. Service entrance conductor connections to the service drop conductors shall be positioned below the service head. [Section 230.54(C) & (F)]
4. GROUND CLAMPS Aluminum ground Clamps used for connecting the grounding electrode conductor to the water service entrance will not be approved. Ground clamps must be listed assemblies rated for the size of the grounding electrode conductor and attached to the water service pipe upstream of any valves, regulators, etc. (Section 250.70]
5. PHYSICAL PROTECTION OF NM CABLE—Where nonmetallic cables are installed exposed in locations subject to physical damage (for example in garages, attics and tool sheds) they shall be protected by guard strips or other approved means. The concealed space between $\frac{3}{4}$" strapping is considered to be an area subject to physical damage. Nonmetallic cables fastened to the bottom of framing members and between such strapping shall be protected from physical damage with metal plates or other approved means. [Section 334.15(B)}
6. ARC-FAULT PROTECTION—Arc-fault circuit breakers are required on most new residential branch circuits. For service panel upgrades, arc-fault protection for branch circuits is required where the existing circuits were already arc-fault protected and for new circuits. [Section 210.12]

BUILDING PERMIT FEE SCHEDULE

ALL PERMIT FEES ARE DUE UPON SUBMISSION OF PERMIT APPLICATION

For residential (detached) one and two-family construction and renovation

Cost of construction	Fee		Permit fee
$0 to $500:	$25.	with the 5%	$26.00
$ 500 to $ 1,000	$ 30.	with the 5%	$31.00
$ 1,001 to $ 3,000:	$50.	with the 5%	$52.00
$3,001 to $5,000:	$70.	with the 5%	$73.00

Over $5,000: $ 70 plus 5/10 of 1% of the total cost of alterations or construction ~(see example calculation below)
(rounded to the nearest whole dollar)

For multi—family, commercial and industrial construction and renovation

Cost of construction	Fee		Permit fee
$0 to $500:	$30.	with the 5%	$31.00
$501 to $1,000:	$50.	with the 5%	$52.00
$1,001 to $3,000:	$70.	with the 5%	$74.00
$3,001to $5,000:	$100.	with the 5%	$106.00

Over $5,000: $100 plus 6/10 of 1% of the total cost of alternations or construction ~(see example calculation below)
(rounded to the nearest whole dollar)

Five percent (5%) shall be applied against all permit fees for fire Department and Department of Public Works review and inspections.

The term "total cost" as used in this section, is subject to the approval of the Code Official and means the reasonable value of all services, labor, materials, and equipment necessary for the prosecution and completion of the structure ready for occupancy. It shall include the value of all structural, electrical, mechanical, plumbing, like safety and fire protection work and equipment, all interior finishes, all normal site preparation, excavation and backfill directly related to the building. On-site utilities (water and wastewater systems) shall not be included in the total cost of construction.

Examples on calculating permit fees

Residential	Commercial
10,000.00 (cost of construction)	10,000.00 (cost of construction)
x.005	x.006
50.00	60.00
+70.00	+100.00
120.00	160.00
X 5%	X5%
6.00	8.00
+120.00	+160.00
$126.00 Permit fee due	$168.00 Permit fee due

Adopted by city council on 6/4/05

Codes
Department

Building and Zoning
51 North Park Street
Lebanon, NH 03766
Telephone: 603-448-1524
Facsimile: 603-448-0684

Information for Homeowners' Doing Electrical Work
(4-2013)

In New Hampshire RSA 319-C:15 allows a person to do electrical work in a single family residence as long as this is their primary residence and is being occupied by the person doing the electrical work. All electrical work must be done to standards set forth in the National Electrical Code (2014 Edition).

If you are going to do the electrical work, you must schedule a **pre-permit meeting.** This meeting is to go over the scope of the work you are going to do in order to try and avoid having to redo any of the work because you may not have been aware of all the NEC regulations.

Chapters 1-4 of the 2014 NEC contains many standards of wiring of single family homes. Here are a few of these articles:

1) Article 210.8 addresses circuits that need to be Ground Fault Protected (GFCI'd).
2) Article 210.12 deals with circuits that need Arc Fault Protection.
3) Article 334 deals with the permitted use and installation of romex wire.
4) Article 314.16 deals with the number of conductors allowed in electrical boxes.
5) Article 406.13 tells when it is necessary to use tamper resistance outlets.
6) Article 300.5 gives minimum cover for buried circuits.
7) A very important article is 210.52 which gives the layout of receptacles in different rooms and the required circuits needed in different areas of a single family home.

These are only a few of the more common articles in the NEC pertaining to single family home wiring. Again, all electrical world done whether by a homeowner or a licensed electrician must conform to standards found in the 2014 NEC which has been adopted by the State of New Hampshire and the City of Lebanon.

If you have further questions, please contact the City of Lebanon Codes Dept at 603-448-1457

Codes Department

Building and Zoning
51 North Park Street
Lebanon, NH 03766
Telephone: 603-448-1524
Facsimile: 603-448-0684

SUPPORT STATEMENT FOR SOLAR PHOTOVOLTAIC (PV) PERMIT APPLICATION

(IF THE PROJECT IS NOT SOLAR, YOU DO NOT NEED TO COMPLETE THESE REMAINING PAGES)

Contractor: ____

Street Address: ____

Town: ____________________________ Zip: ____________

Contact Name: Phone: ____

Email: ____

License Type: ____

License Number: ____

Scope of Work: ____

++

Building information (For Roof-Mounted Systems ONLY)

Building Type (e.g. house, shed, barn, slab): ____________________________

Building Height (in feet): ____________________________

Is the building new or existing construction? ☐ New ☐ Existing Construction ☐ NA

NOTE: Solar cannot reflect upon other residences

++

Electrical Description:

Size (amps) and type (phase, voltage) or electrical service: ____________________________

Amperage of main breaker: ____________ Will the value of main breaker change? ☐ Yes ☐ No

Rated amperage of the bus bar in the main panel: ____________________________

Type of interconnection (e.g. breaker-load side, supply-side interconnect): ____________________________

Electrical Panel Location: ____________________________

If load side interconnect, will solar intertie into a subpanel: ☐ Yes ☐ No

If Yes, rated amperage of the subpanel bus bar? ____________________________

Value of breaker protecting subpanel bus bar? ____________________________

++

Attachments for application (Check all that are attached. See examples on next pages.)

☐ One-line Electrical Drawing

☐ One-line Site Plan Drawing

++

Instructions for ATTACHMENTS to the City of Lebanon Electrical/Solar PV Permit Application

Please Complete the Application Form (pages 1-2) and provide ALL applicable Attachments based on the below instructions and examples for Attachments 2-7. Attachment 8 is a structural Review Worksheet to be used if applicable, provided as a separate form. Additional information required by a municipality for large solar PV Systems can be submitted as an attachment.

++

Attachment 1: One-Line Electrical Drawing Must Show:

- Size of electrical service
  - □Size of main breaker
  - □Size of Bus Bar (if known)
- Type of electrical service
- If interconnection point is a subpanel
  - □ Size of Subpanel Main Breaker
  - □ Size of Subpanel Bus Bar (If Known)
- Nominal power of solar system (Watts)
  - □ DC Capacitv: Nameplate "STC" Value of all panels, watts
  - □ AC Capacity: Total AC capacity of Inverters, watts
- Batteries (If Present): Type, Quantity, Nominal Voltage, Capacity kWh
  - □ H2 mitigation methods (If Necessary)
- Interconnection method
  - □ Size of overcurrent protection
- Number, type and electrical configuration of electrical configuration of solar panels
- Number and type of Inverters
- Values for source stickers: NEC 690.53; NEC690.54 (Encouraged, Not Required)
- Wiring methods
  - □ Wire Type(s), Size
  - □ Conduit Type(s), Size
- Solar metering (If Appropriate)
- Electrical current contribution from all PV sources
- Electrical grounding details: Wire Type, Size, GEC

++

Attachment 2: One-Line Site Plan Drawing Must Show:

- Location of solar panels
- Location of inverters and major equipment
- Location of roof obstructions (Vents, Chimneys, etc.)
- Location of Main Breaker Panel
- Location of Utility Meter
- Location of AC disconnect
- Location of batteries and/or charge controllers (if appropriate)
- Location of solar metering (If appropriate)
- Planned conduit path (Encouraged, Not Required)
- Gross dimensions of structure (If appropriate)
- Approximate layout of building or other structure (If appropriate)
- Property lines, zoning, and setback considerations (If appropriate)
- Trenching details: Location, Depth and Length of Trench (If appropriate)
- A notation indicating scale – or not to scale (Both are Acceptable)

++

Attachment 3: Solar PV Module Specifications Sheets (provide PDF from manufacturer)

Attachment 4: Inverter Specification Sheets (provide PDF from manufacturer)

Attachment 5: Pole Mount or Ground Mount Information (if applicable)

- Racking system
- Mounting specification sheets and details from manufacturer (PDFs)
- Manufacturer's Pre-Engineered Document or PE Stamp
- Code Compliance Manual
- One-way distance from the Solar PV system to the Interconnection point
- Electrical grounding details
- Height of solar PV system at maximum design tilt
- Applicable zoning information if not shown on site plan (e.g. setback from property line)

Sample Solar PV Electrical One Line

Design includes a total of 18 1soltech 250W 1STH-250 solar panels.
The inverter is powered by two strings of 9 solar panels.

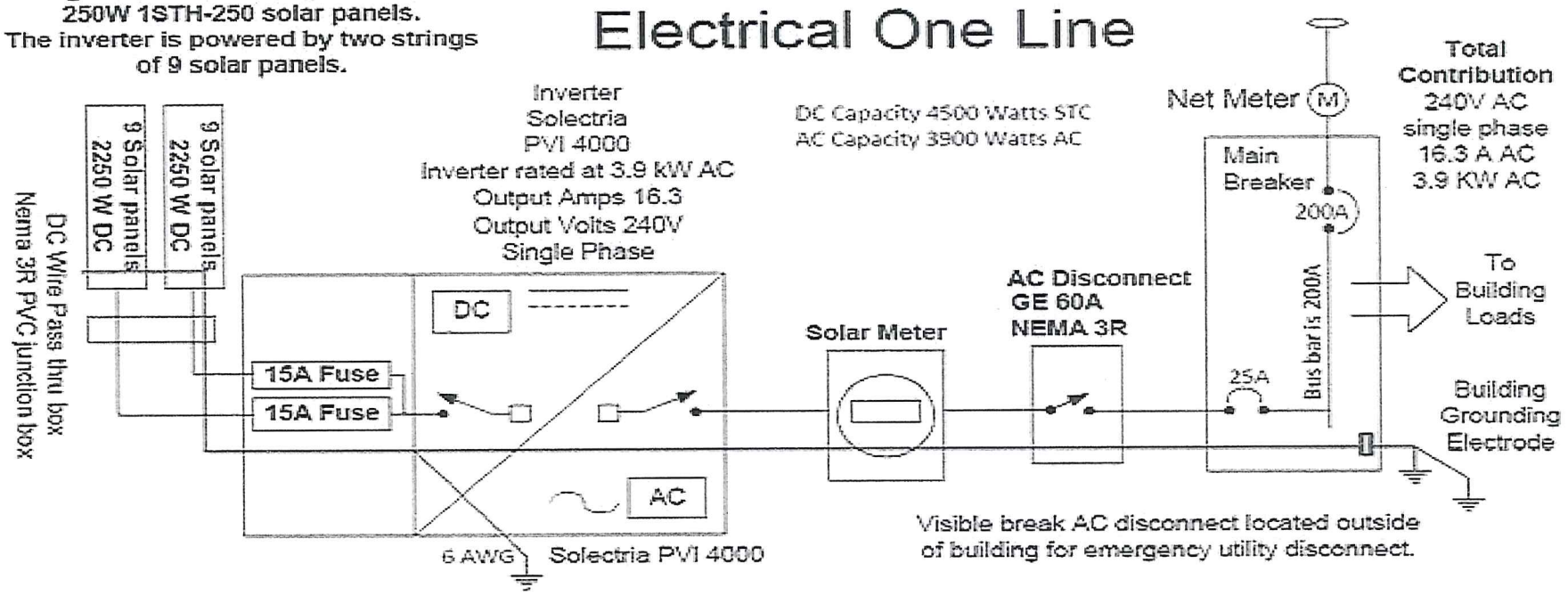

DC Wire Types
PV Wire – 10 AWG 90° C on roof
In conduit THWN-2 10 AWG 90°wire
Rails grounded with bare 8 awg
DC Grounding cable 6 awg bare or green
¾ inch EMT Conduit

AC Wire Type
THWN-2 6 awg 90°wire
¾ inch EMT Conduit

Point of Interconnection Sticker	690.54
AC Operating Volts	240 V
Max Operating Current	16.3 A

Source Sticker NEC	690.53
Operating Current	16.3 A
Operating Voltage	277 V
Maximum System Voltage	400 V
Short Circuit Current	27.1 A

Installation Company Name Contact name Phone # Installer Address Town, NH	Property Owner Address
	Drawing Number 101 Revision 1
	Month Day, Year Drawn By: Name of Designer

Note: Each DC Grounding cable will be 6 awg bare or green and connect to building grounding electrode.

Sample Solar PV
One Line Site Plan

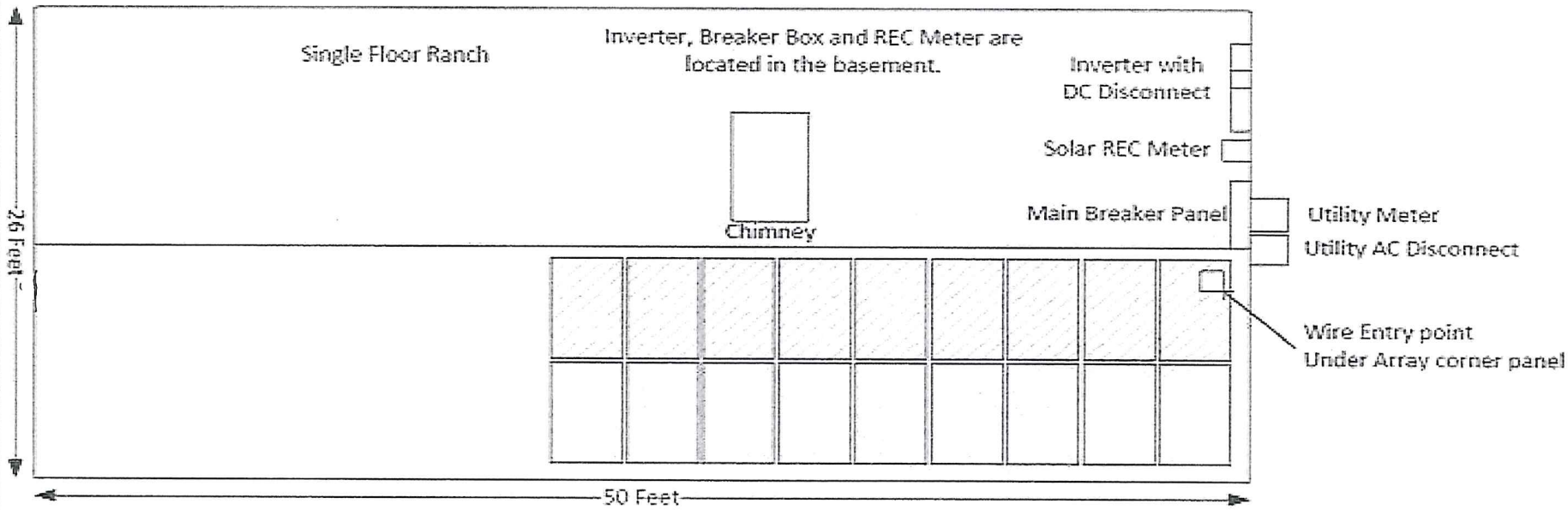

Visible break AC disconnect located outside of building for emergency utility disconnect.

S

Installation Company Name Contact name Phone # Installer Address Town, NH	Property Owner Address
	Drawing Number 101 Revision 1
	Month Day, Year Drawn By: Name of Designer